UNIVERSITY OF CAMBRIDGE INTERNATIONAL EXAMINATIONS
General Certificate of Education
Advanced Subsidiary Level and Advanced Level

PHYSICS **9702/11**

Paper 1 Multiple Choice **May/June 2012**

1 hour

Additional Materials: Multiple Choice Answer Sheet
Soft clean eraser
Soft pencil (type B or HB is recommended)

* 1 4 1 3 3 6 1 5 8 3 *

READ THESE INSTRUCTIONS FIRST

Write in soft pencil.
Do not use staples, paper clips, highlighters, glue or correction fluid.
Write your name, Centre number and candidate number on the Answer Sheet in the spaces provided unless this has been done for you.

There are **forty** questions on this paper. Answer **all** questions. For each question there are four possible answers **A**, **B**, **C** and **D**.
Choose the **one** you consider correct and record your choice in **soft pencil** on the separate Answer Sheet.

Read the instructions on the Answer Sheet very carefully.

Each correct answer will score one mark. A mark will not be deducted for a wrong answer.
Any working should be done in this booklet.

This document consists of **24** printed pages.

© UCLES 2012

Data

speed of light in free space, $c = 3.00 \times 10^{8}\,\text{m s}^{-1}$

permeability of free space, $\mu_0 = 4\pi \times 10^{-7}\,\text{H m}^{-1}$

permittivity of free space, $\varepsilon_0 = 8.85 \times 10^{-12}\,\text{F m}^{-1}$

$\left(\dfrac{1}{4\pi\varepsilon_0} = 8.99 \times 10^{9}\,\text{m F}^{-1}\right)$

elementary charge, $e = 1.60 \times 10^{-19}\,\text{C}$

the Planck constant, $h = 6.63 \times 10^{-34}\,\text{J s}$

unified atomic mass constant, $u = 1.66 \times 10^{-27}\,\text{kg}$

rest mass of electron, $m_\text{e} = 9.11 \times 10^{-31}\,\text{kg}$

rest mass of proton, $m_\text{p} = 1.67 \times 10^{-27}\,\text{kg}$

molar gas constant, $R = 8.31\,\text{J K}^{-1}\,\text{mol}^{-1}$

the Avogadro constant, $N_\text{A} = 6.02 \times 10^{23}\,\text{mol}^{-1}$

the Boltzmann constant, $k = 1.38 \times 10^{-23}\,\text{J K}^{-1}$

gravitational constant, $G = 6.67 \times 10^{-11}\,\text{N m}^2\,\text{kg}^{-2}$

acceleration of free fall, $g = 9.81\,\text{m s}^{-2}$

© UCLES 2012

Formulae

uniformly accelerated motion, $s = ut + \frac{1}{2}at^2$

$v^2 = u^2 + 2as$

work done on/by a gas, $W = p\Delta V$

gravitational potential, $\phi = -\frac{Gm}{r}$

hydrostatic pressure, $p = \rho gh$

pressure of an ideal gas, $p = \frac{1}{3}\frac{Nm}{V}\langle c^2 \rangle$

simple harmonic motion, $a = -\omega^2 x$

velocity of particle in s.h.m., $v = v_0 \cos \omega t$

$v = \pm \omega \sqrt{x_0^2 - x^2}$

electric potential, $V = \frac{Q}{4\pi\varepsilon_0 r}$

capacitors in series, $1/C = 1/C_1 + 1/C_2 + \ldots$

capacitors in parallel, $C = C_1 + C_2 + \ldots$

energy of charged capacitor, $W = \frac{1}{2}QV$

resistors in series, $R = R_1 + R_2 + \ldots$

resistors in parallel, $1/R = 1/R_1 + 1/R_2 + \ldots$

alternating current/voltage, $x = x_0 \sin \omega t$

radioactive decay, $x = x_0 \exp(-\lambda t)$

decay constant, $\lambda = \frac{0.693}{t_{\frac{1}{2}}}$

© UCLES 2012

[Turn over

1 When a force F moves its point of application through a displacement s in the direction of the force, the work W done by the force is given by

$$W = Fs.$$

How many vector quantities and scalar quantities does this equation contain?

A one scalar quantity and two vector quantities

B one vector quantity and two scalar quantities

C three scalar quantities

D three vector quantities

2 What is a possible unit for the product VI, where V is the potential difference across a resistor and I is the current through the same resistor?

A newton per second ($\mathrm{N\,s^{-1}}$)

B newton second ($\mathrm{N\,s}$)

C newton metre ($\mathrm{N\,m}$)

D newton metre per second ($\mathrm{N\,m\,s^{-1}}$)

3 What is a reasonable estimate of the average kinetic energy of an athlete during a 100 m race that takes 10 s?

A 40 J **B** 400 J **C** 4000 J **D** 40 000 J

Space for working

© UCLES 2012

4 A light-meter measures the intensity I of the light falling on it. Theory suggests that I varies inversely as the square of the distance *d*.

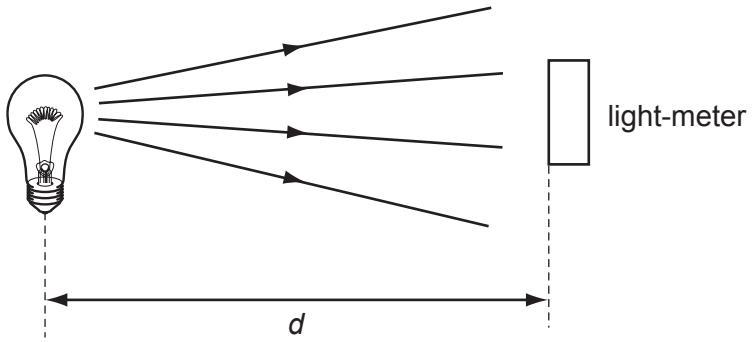

Which graph of the results supports this theory?

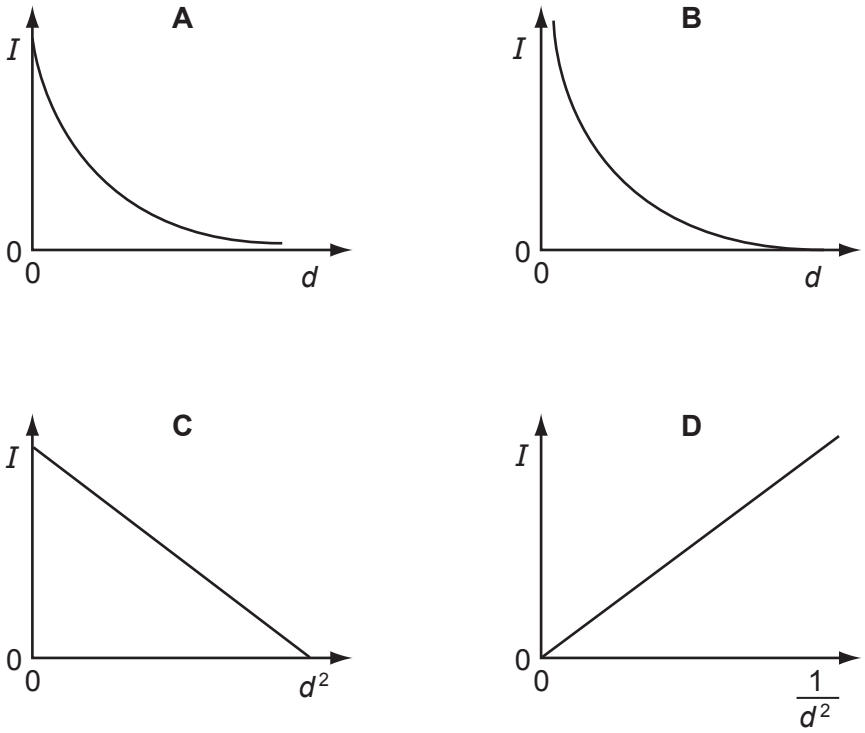

Space for working

5 In an experiment, a radio-controlled car takes 2.50 ± 0.05 s to travel 40.0 ± 0.1 m.

What is the car's average speed and the uncertainty in this value?

A $16 \pm 1\,m\,s^{-1}$

B $16.0 \pm 0.2\,m\,s^{-1}$

C $16.0 \pm 0.4\,m\,s^{-1}$

D $16.00 \pm 0.36\,m\,s^{-1}$

6 In an experiment to determine the acceleration of free fall using a falling body, what would lead to a value that is too large?

A air resistance

B dimensions of the body are too large

C measured distance longer than true distance

D measured time longer than true time

7 Which feature of a graph allows acceleration to be determined?

A the area under a displacement-time graph

B the area under a velocity-time graph

C the slope of a displacement-time graph

D the slope of a velocity-time graph

Space for working

© UCLES 2012

8 The diagram shows a laboratory experiment in which a feather falls from rest in a long evacuated vertical tube of length *L*.

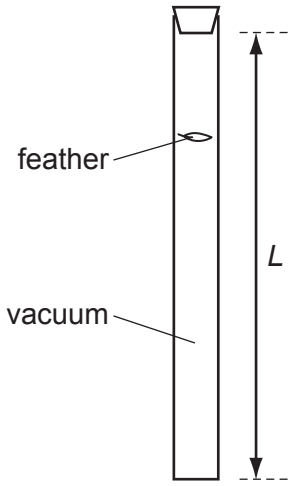

The feather takes time *T* to fall from the top to the bottom of the tube.

How far will the feather have fallen from the top of the tube in time 0.50 *T*?

A 0.13 *L* **B** 0.25 *L* **C** 0.38 *L* **D** 0.50 *L*

9 In the absence of air resistance, a stone is thrown from P and follows a parabolic path in which the highest point reached is T. The stone reaches point Q just before landing.

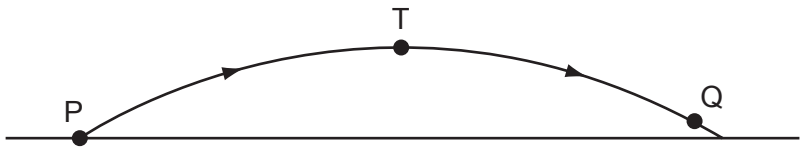

The vertical component of acceleration of the stone is

A zero at T.

B larger at T than at Q.

C larger at Q than at T.

D the same at Q as at T.

Space for working

10 Each option gives a correct word equation involving force.

Which option gives the definition of force?

A force = energy divided by displacement

B force = mass × acceleration

C force = pressure × area

D force = rate of change of momentum

11 Two similar spheres, each of mass *m* and travelling with speed *v*, are moving towards each other.

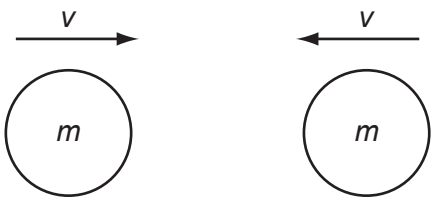

The spheres have a head-on elastic collision.

Which statement is correct?

A The spheres stick together on impact.

B The total kinetic energy after impact is mv^2.

C The total kinetic energy before impact is zero.

D The total momentum before impact is $2mv$.

Space for working

© UCLES 2012

12 The diagram shows a barrel suspended from a frictionless pulley on a building. The rope supporting the barrel goes over the pulley and is secured to a stake at the bottom of the building.

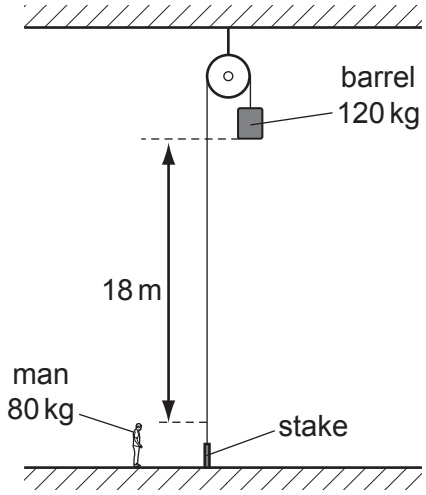

A man stands close to the stake. The bottom of the barrel is 18 m above the man's head. The mass of the barrel is 120 kg and the mass of the man is 80 kg.

The man keeps hold of the rope after untying it from the stake and is lifted upwards as the barrel falls.

What is the man's upward speed when his head is level with the bottom of the barrel? (Use $g = 10\,m\,s^{-2}$.)

A $6\,m\,s^{-1}$ **B** $8\,m\,s^{-1}$ **C** $13\,m\,s^{-1}$ **D** $19\,m\,s^{-1}$

Space for working

© UCLES 2012

13 A cylindrical block of wood has cross-sectional area A and weight W. It is totally immersed in water with its axis vertical. The block experiences pressures p_t and p_b at its top and bottom surfaces respectively.

Which expression is equal to the upthrust on the block?

A $(p_b - p_t)A + W$

B $(p_b - p_t)$

C $(p_b - p_t)A$

D $(p_b - p_t)A - W$

14 A car of mass m travels at constant speed up a slope at an angle θ to the horizontal, as shown in the diagram. Air resistance and friction provide a resistive force F.

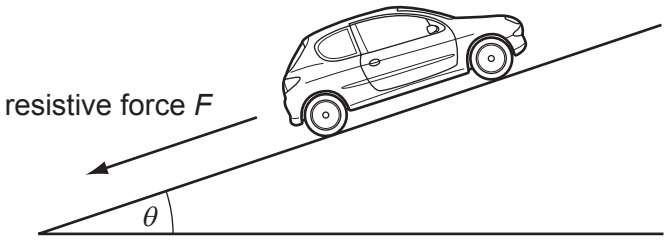

What force is needed to propel the car at this constant speed?

A $mg \cos \theta$

B $mg \sin \theta$

C $mg \cos \theta + F$

D $mg \sin \theta + F$

Space for working

© UCLES 2012

15 The diagram shows a crane supporting a load *L*.

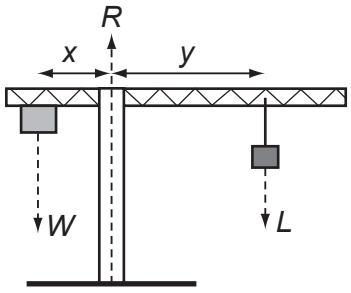

A mass provides a balancing load *W*. The position of the load is such that the system is perfectly balanced with $Wx = Ly$. The ground provides a reaction force *R*. The distance *x* does not change.

If the load is moved further out so that the distance *y* increases and the crane does not topple, which statement is correct?

A

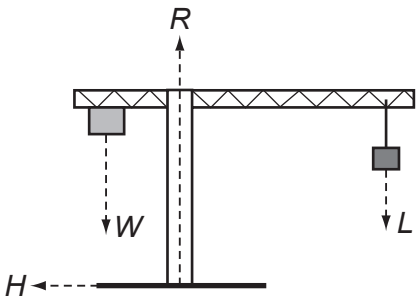

A horizontal force *H* acts on the base of the support column towards the left.

B

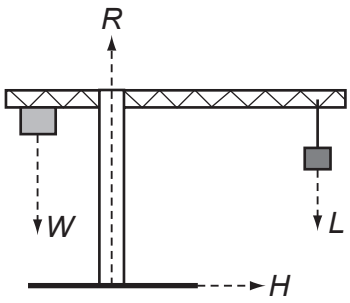

A horizontal force *H* acts on the base of the support column towards the right.

C

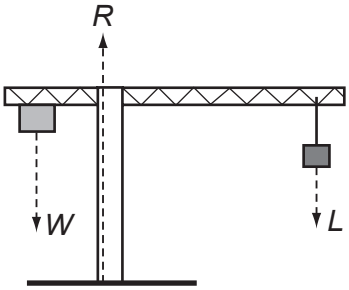

The reaction force *R* moves to the left.

D

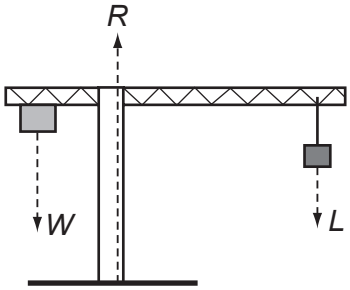

The reaction force *R* moves to the right.

Space for working

16 A concrete cube of side 0.60 m and uniform density 2.0×10^3 kg m^{-3} is lifted 5.0 m vertically by a crane.

What is the change in potential energy of the cube?

A 2.2 kJ **B** 21 kJ **C** 59 kJ **D** 450 kJ

17 The force resisting the motion of a car is taken as being proportional to the square of the car's speed. The magnitude of the force at a speed of 20 m s^{-1} is 800 N.

What effective power is required from the car's engine to maintain a steady speed of 40 m s^{-1}?

A 32 kW **B** 64 kW **C** 128 kW **D** 512 kW

18 The data below are taken from a test of a petrol engine for a motor car.

power output	150 kW
fuel consumption	20 litres per hour
energy content of fuel	40 MJ per litre

Which expression will evaluate the efficiency of the engine?

A $\dfrac{150 \times 10^3}{40 \times 10^6 \times 20 \times 60 \times 60}$

B $\dfrac{150 \times 10^3 \times 60 \times 60}{20 \times 40 \times 10^6}$

C $\dfrac{150 \times 10^3 \times 40 \times 10^6 \times 20}{60 \times 60}$

D $\dfrac{150 \times 10^3 \times 20}{40 \times 10^3 \times 60 \times 60}$

Space for working

© UCLES 2012

19 What is the internal energy of an object?

A It is the energy associated with the object's movement through space.

B It is the energy associated with the random movement of the molecules in the object.

C It is the energy due to the attractions between the molecules in the object.

D It is the sum of all the microscopic potential and kinetic energies of the molecules in the object.

20 Each box shows identical molecules of a gas represented by circles with arrows to show the direction of travel and the speed of the molecule. A longer arrow represents a higher speed.

Which box contains a gas of the highest density and the lowest temperature?

A

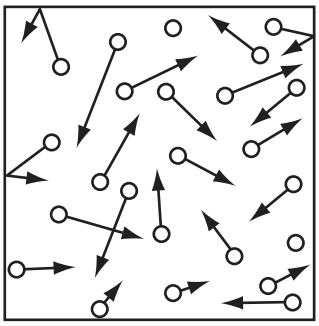

B

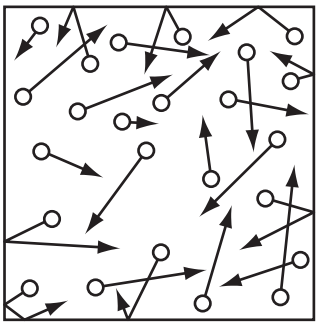

C

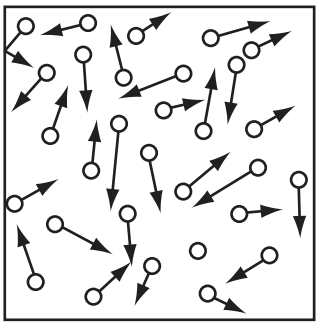

D

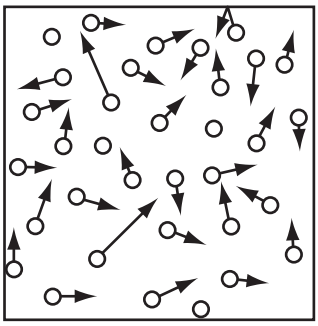

Space for working

21 At room temperature, the density of liquid mercury is five times greater than the density of solid aluminium.

What is the reason for this?

A Aluminium atoms are spaced widely apart.

B Aluminium atoms move more freely than mercury atoms.

C Atoms in a liquid take up less space than atoms in a solid.

D Mercury atoms have greater mass than aluminium atoms.

22 When white sugar granules are heated, they melt. When the melt is cooled quickly, a brittle solid form of toffee is produced.

How does the structure of the sugar change?

A amorphous to polymeric

B crystalline to amorphous

C crystalline to polymeric

D polymeric to amorphous

23 Which property of a metal wire depends on its Young modulus?

A ductility

B elastic limit

C spring constant

D ultimate tensile stress

Space for working

© UCLES 2012

24 The diagram shows a wire of diameter D and length L that is firmly clamped at one end between two blocks of wood. A load is applied to the wire which causes it to extend by an amount x.

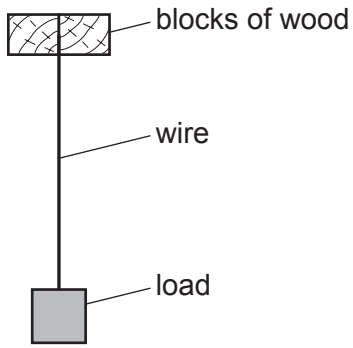

By how much would a wire of the same material, but of diameter $2D$ and length $3L$, extend when the same load is applied?

A $\frac{2}{3}x$ **B** $\frac{3}{4}x$ **C** $\frac{4}{3}x$ **D** $\frac{3}{2}x$

25 What is represented by the gradient of a graph of force (vertical axis) against extension (horizontal axis)?

A elastic limit

B spring constant

C stress

D Young modulus

Space for working

26 Two waves E and G are shown. The waves have the same speed.

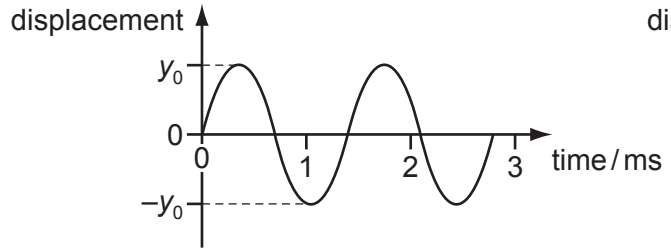

E

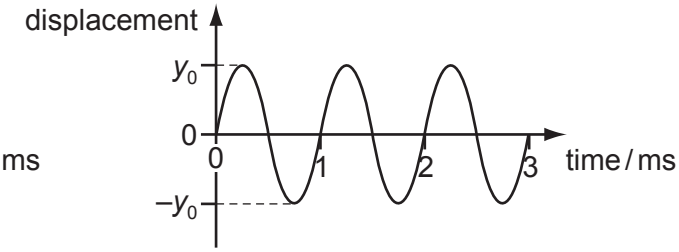

G

Which statement is correct?

A Wave E has a greater amplitude than wave G.

B Wave E has a greater intensity than wave G.

C Wave E has a smaller frequency than wave G.

D Wave E has a smaller wavelength than wave G.

27 The diagram shows a displacement-time graph for a progressive wave.

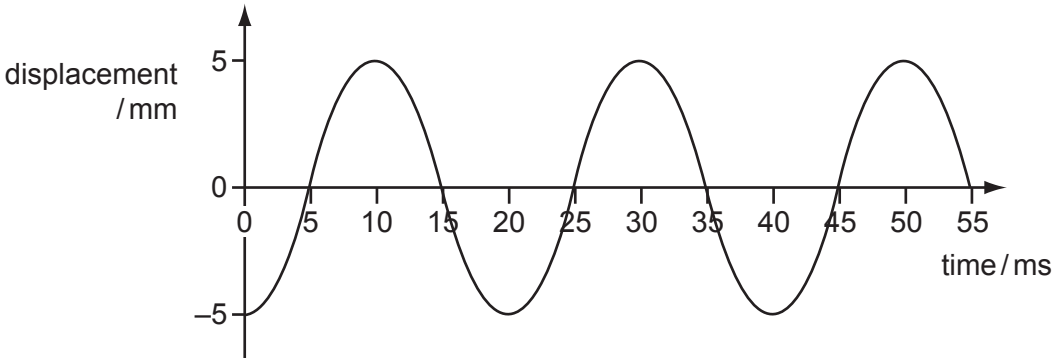

What are the amplitude and frequency of the wave?

	amplitude / mm	frequency / Hz
A	5	40
B	5	50
C	10	40
D	10	50

Space for working

© UCLES 2012

28 Which observation indicates that sound waves are longitudinal?

A Sound can be reflected from a solid surface.

B Sound cannot be polarised.

C Sound is diffracted around corners.

D Sound is refracted as it passes from hot air to cold air.

29 To produce a stationary wave, two waves must travel in opposite directions through the same space.

Which statement about the properties of the two waves must also be true?

A The waves must have equal frequency, but a different speed and wavelength.

B The waves must have equal speed, but a different wavelength and frequency.

C The waves must have equal speed, frequency and wavelength.

D The waves must have equal wavelength, but a different speed and frequency.

30 A diffraction grating is used to measure the wavelength of monochromatic light, as shown in the diagram.

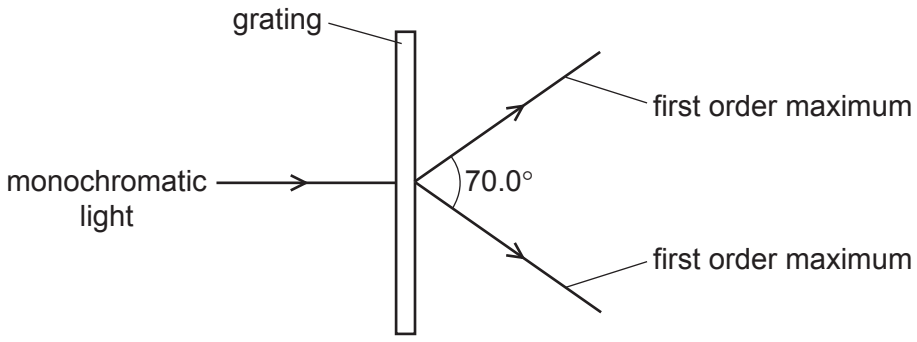

The spacing of the slits in the grating is 1.00×10^{-6} m. The angle between the first order diffraction maxima is 70.0°.

What is the wavelength of the light?

A 287 nm **B** 470 nm **C** 574 nm **D** 940 nm

Space for working

31 A dipole is a pair of one negative charge and one positive charge of equal magnitude. The electric field of a dipole is shown below.

In which direction does the force act on an electron when at point X?

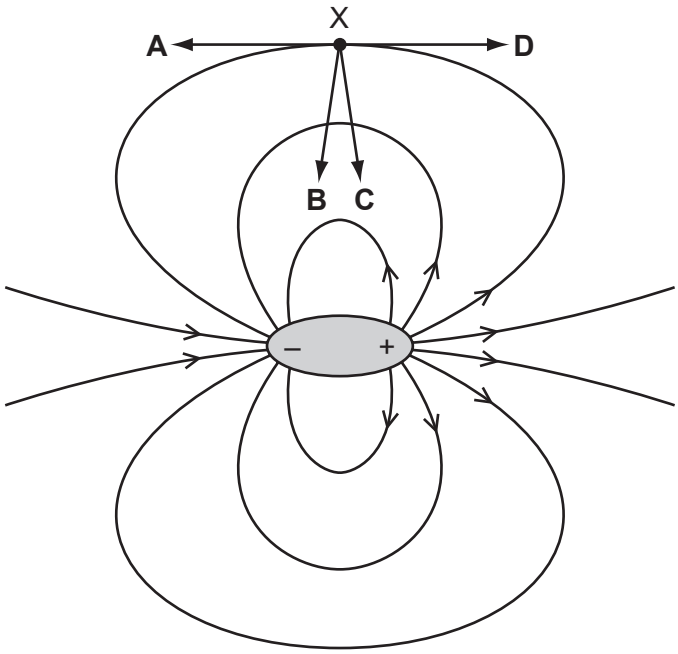

Space for working

32 Lightning can occur between a charged cloud and the Earth's surface when the electric field strength in the intervening atmosphere reaches 25 kN C^{-1}. The diagram shows the electric field between the base of a cloud and the Earth's surface.

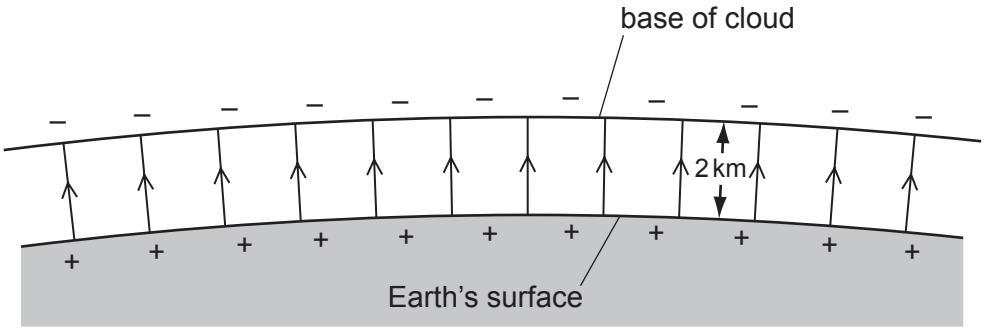

What is the minimum potential difference between the Earth and the base of a cloud, 2 km high, for lightning to occur?

A 12.5 MV **B** 25 MV **C** 50 MV **D** 100 MV

33 There is a current of 10 mA in a conductor for half an hour.

How much charge passes a point in the conductor in this time?

A 0.3 C **B** 5 C **C** 18 C **D** 300 C

34 An iron wire has length 8.0 m and diameter 0.50 mm. The wire has resistance R.

A second iron wire has length 2.0 m and diameter 1.0 mm.

What is the resistance of the second wire?

A $\frac{R}{16}$ **B** $\frac{R}{8}$ **C** $\frac{R}{2}$ **D** R

Space for working

© UCLES 2012

35 The diagram shows a simple circuit.

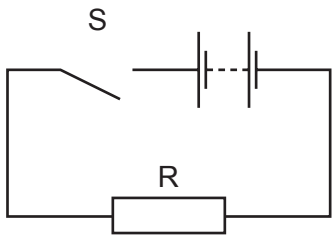

Which statement is correct?

A When switch S is closed, the electromotive force (e.m.f.) of the battery falls because work is done against the internal resistance of the battery.

B When switch S is closed, the e.m.f. of the battery falls because work is done against the resistance R.

C When switch S is closed, the potential difference across the battery falls because work is done against the internal resistance of the battery.

D When switch S is closed, the potential difference across the battery falls because work is done against the resistance R.

Space for working

© UCLES 2012

36 In the circuit below, the ammeter reading is I and the voltmeter reading is V.

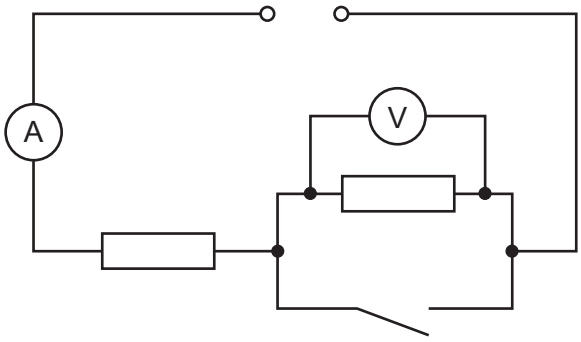

When the switch is closed, which row describes what happens to I and V?

	I	V
A	decreases	decreases to zero
B	increases	decreases to zero
C	increases	stays the same
D	stays the same	increases

Space for working

37 A potential divider consists of a light-dependent resistor (LDR) in series with a variable resistor of resistance *R*. The resistance of the LDR decreases when the light level increases. The variable resistor can be set at either high resistance or low resistance.

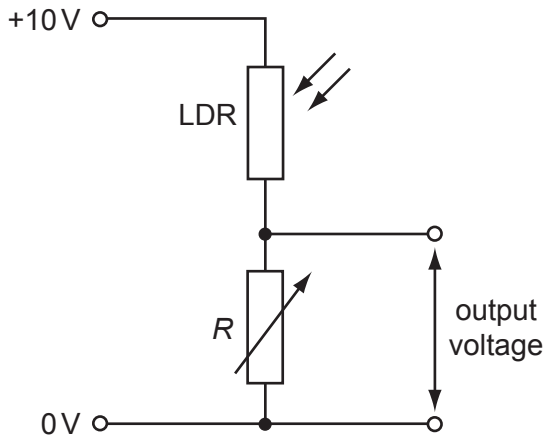

Which situation gives the largest output voltage?

	light level at LDR	*R*
A	high	high
B	high	low
C	low	high
D	low	low

Space for working

© UCLES 2012

38 The circuit below has a current I in the resistor R.

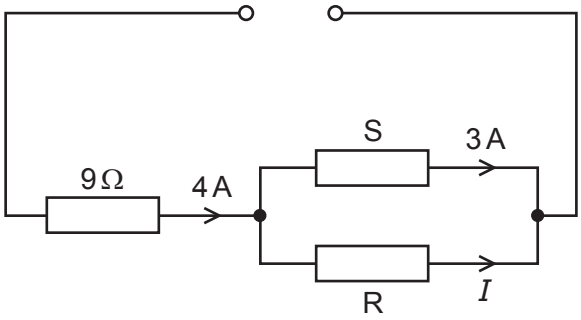

What must be known in order to determine the value of I?

A e.m.f. of the power supply

B resistance of resistor S

C Kirchhoff's first law

D Kirchhoff's second law

39 An experiment in which α-particles were deflected by a gold foil produced new insights into the structure of the atom.

Which conclusion can be drawn from the results of the experiment?

A Atomic nuclei occupy a very small fraction of the volume of an atom.

B Electrons orbit the atomic nucleus.

C Some atoms of the same element contain different numbers of neutrons.

D The atomic nucleus contains protons and neutrons.

Space for working

40 Thorium-234 ($^{234}_{90}$Th) decays by β-emission into a daughter product which in turn decays by further β-emission into a granddaughter product.

Which letter in the diagram represents the granddaughter product?

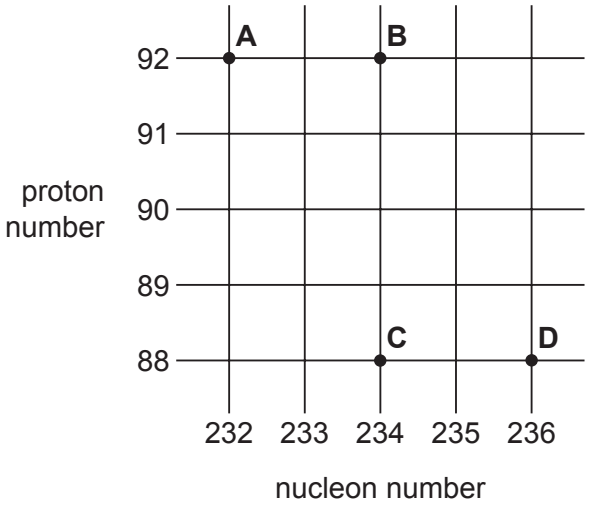

Space for working

Permission to reproduce items where third-party owned material protected by copyright is included has been sought and cleared where possible. Every reasonable effort has been made by the publisher (UCLES) to trace copyright holders, but if any items requiring clearance have unwittingly been included, the publisher will be pleased to make amends at the earliest possible opportunity.

University of Cambridge International Examinations is part of the Cambridge Assessment Group. Cambridge Assessment is the brand name of University of Cambridge Local Examinations Syndicate (UCLES), which is itself a department of the University of Cambridge.

© UCLES 2012